ARIC
appliance recycling
information center

. refrigerators . ranges . ovens . freezers . clotheswashers . clothesdryers . dishwashers . disposers . compactors . roomairconditioners . dehumidifiers . microwaves . refrigerators . ranges . ovens . freezers . clotheswashers .

1111 19th st., nw suite 402 washington, dc 20036
tel 202 . 872 . 5955 fax 202 . 872 . 9354 e-mail aric@aham.org

INFOBulletin #8

MERCURY IN HOME APPLIANCES

Background

Mercury is a naturally occurring element found in soils and minerals but it is regulated as an environmental pollutant. The attention recently directed toward mercury has led to questions of whether major home appliances are made with mercury-containing components.

Mercury-containing components are found in major home appliances in one of three ways: (1) as a safety devices used in pilot-light gas ranges; (2) in lid-light switches of chest freezers manufactured prior to 2000, and (3) in the small fluorescent lights that back-light control panels on ranges and clothes washers. Clothes washers manufactured before 1972 had mercury switches in some models, but nearly all of these units have passed through the recycling stream years ago.

Appliances with mercury-containing components are a very small percentage of all appliances retired in any year and in many applications the mercury is used in a critical safety component, designed to prevent hazards far greater than any risks posed by its use in these small amounts. The amount of mercury in these components is so small that appliances have been, and can continue to be, safely recycled or buried for disposal without any risk of harm to the environment. Information in this bulletin is designed to help professional scrap and waste handlers remove these components from appliances before crushing, shredding or otherwise processing the appliances in a way that could release elemental mercury.

CAUTION: Except for fluorescent light bulbs, individual homeowners should not attempt to remove these components. Removing these components can make an appliance very dangerous if later operated. For this reason, appliances that have components removed should be completely destroyed or disabled, something that can only be done safely by a scrap and waste professional. Also, these components are fragile and could be harmful if not properly handled after being removed.

Applications in Appliances

Gas Pilot-Light Ranges: Gas ranges are ignited using either an electronic ignition system or a pilot-light. Pilot-light ranges require a mechanical safety device to detect whether the pilot-light is on and shut off the supply of gas to the burner when the pilot-light is not burning. Otherwise, the potential exists for a dangerous quantity of gas to build up in the oven. The mechanical safety device (known also as a mercury diostat) that can perform this critical safety task contains mercury. These devices contain approximately 0.07 oz (1.98 g) of mercury (all measurements are shown by weight).

Other control options require replacing the gas pilot-light with an electrical ignition system, which is costly and requires an electrical supply near the range. Many older homes would require extensive rewiring to accommodate an electric range or an electric ignition gas range.

Shipments of pilot-light gas ranges in the United States declined from approximately 1,100,000 in 1988 to 690,000 in 1997 to 620,000 in 2000 to 250,000 in 2004, to less than 200,000 in 2008. Gas pilot-light ranges make up a decreasing share of the gas range industry. You can see by the above figures that this trend is accelerating as older housing units are remodeled and replaced. Considering the small quantity of mercury, these safety devices are not a significant potential source of environmental mercury.

Beginning in 2007, most manufacturers of gas pilot-light ranges changed design to a non-mercury safety valve system. Most of the 2007 and even more of the 2008 production are with a non-mercury safety valve. There will continue to be some production of the older mercury diostat replacement parts systems for older ranges in the field, but this will decrease over time.

Many recycling facility operators know that pilot-light gas ranges contain these mercury diostat devices, and have been removing them prior to recycling. For those who wish to initiate that practice, the following is a diagram depicting the mercury containing control device on the gas burner assembly.

The gas burner is located beneath the oven cavity. The mercury-containing sensor control is attached to the burner and is made up of three interconnected parts: a safety valve sensor bulb, a safety valve capillary tube and a gas safety valve control. As the diagram shows, there is an "oven flame spreader" above the burner assembly, which you may need to remove to gain access to the burner assembly. Breaking this three part sensor and control device can result in a mercury leak. To prevent leaking*, you must remove all three parts of the sensor control together and intact* by removing the fasteners near the sensor control and the sensor bulb. After removing the sensor control, place it into a suitable container for storage and shipment to a mercury reclaimer; then *destroy or disable the gas range* to prevent anyone from using it without this critical safety device.

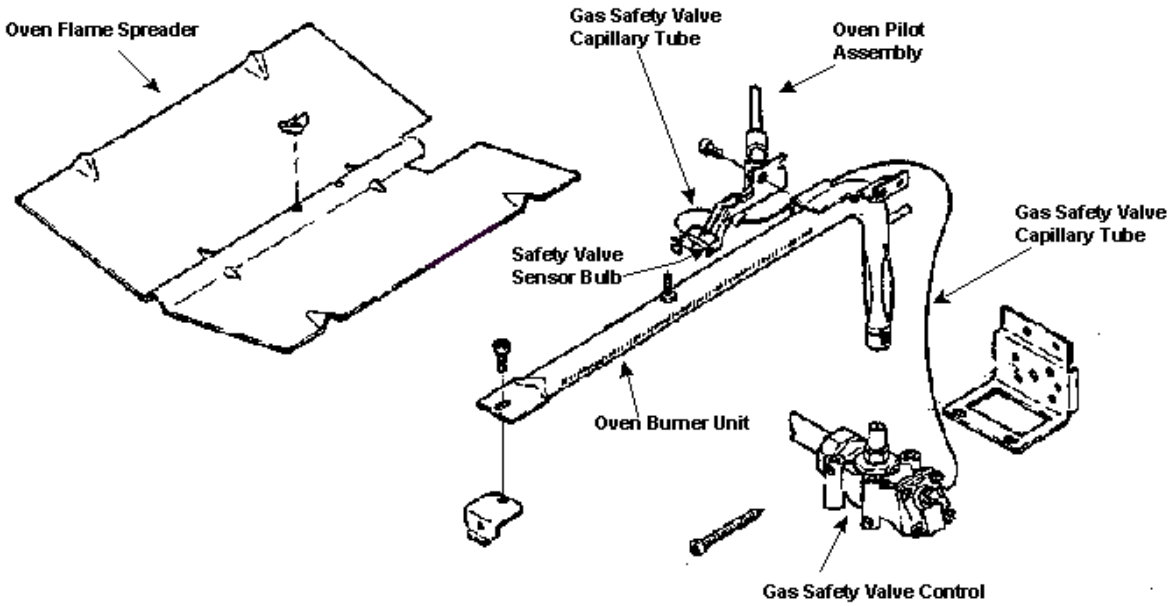

Figure 1 - Oven Burner Assembly for Gas Pilot-Light Ranges with Mercury Diostat Valves

Chest Freezers: Some chest freezers produced before 2000 with an internal lid light had a mercury switch incorporated into the light socket. This device senses when the lid is raised and turns on the light. The mercury switch is a highly reliable means for electrical switching in varied temperature and moisture conditions.

The chest freezer lid mercury switch contains approximately 0.035 oz (1.0 g) of mercury. We estimate that about 190,000 chest freezers sold in the United States in the late 1990's contained this device, up from approximately 106,000 made each year in the early 1980s. Freezers made in the mid 1980's are now entering the waste or recycling stream. Manufacturers changed the design in 2000 to incorporate a non-mercury design.

The following diagram shows the location of this light in most chest freezers. To remove this component, follow these steps in this order: (1) unplug the freezer; (2) remove the plastic light cover; (3) unscrew the bulb; (4) pull the light base out with a one-quarter counter-clockwise turn; (5) cut the wires connected to the light base; (6) place the entire base in a suitable container for storage and shipment to a mercury reclaimer; and (7) *cut off the freezer power cord* to prevent future use and possible shock hazard. Note: all freezers prepared or in storage for recycling should have the doors removed.

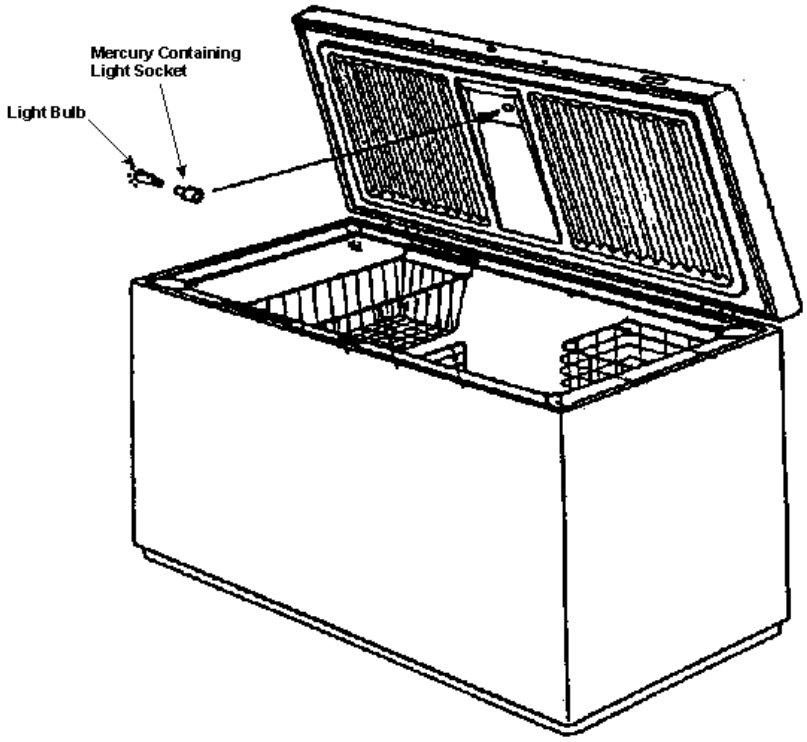

Figure 2 - Chest Freezer with Mercury-Containing Light Socket

Fluorescent Lamps: Small fluorescent lamps are used to illuminate the control panels on the back of a few models of electric ranges and clothes washers. The lamp size, shape and wattage vary from model to model. Fluorescent bulbs are particularly well-suited to this application. The dimensions of these lamps can be made so that a single bulb illuminates a long, narrow control panel. The long life of these bulbs, compared to incandescent lights, reduces the frequency with which they must be replaced. As consumers often keep these back panels lit for long periods of time, their low-energy use also significantly reduces the energy used by these appliances. (Many homeowners report using appliance back-panel lights as a kitchen night light.)

Fluorescent lamps are designed to be removed and replaced during the life of the appliance. The method of removal should be apparent when examining the appliance or contained in the instruction manuals. Since the placement and access varies so widely, it is not practical to provide directions on removing these lamps in this bulletin.

Washing Machines: Some washing machines manufactured before 1972 (over 34 years ago) were made with a mercury switch. One application of the mercury switch was used to detect a lid opening and engage a brake to quickly stop the washer drum from moving. This feature is particularly important when the washer is in a spin cycle because it reduces the risk of a consumer being injured by reaching into a spinning basket. Another use was in the dynamic stabilizing system to prevent a severe out-of-balance condition.

Mercury switches were used in this application because they reliably function in a high-moisture environment. Subsequent engineering advances have led to development of alternatives that have been used for many years now.

Since practically all of the clothes washers manufactured with mercury switches reached the end their useful life years ago and have been processed for recycling or disposal, it would be rare that appliance recyclers would see such a unit. Any washer with a mercury switch entering the waste stream would contain insufficient mercury to justify subjecting all washer products to inspection. For this reason, this bulletin does not provide a description on how to locate and remove these mercury switches.

Component Removal

Only qualified service technicians or disposal professionals should remove pilot sensors in gas ranges or bulb sockets in chest freezers.

Additional Information

Questions concerning a component on a specific product should be directed to the manufacturer of that product.

printed on recycled paper
September 2008